hansgrohe

DogShower
Bundle 150, 3-Jet Select
Finishes : **white** Part no. : **04974700**

Description

Features

- Consists of: Handshower, Handshower hose, Quick connector, 3-way diverter, Garden adapter
- Shower head size: 5 7/8 inches
- Material: Plastic
- Spray modes: Fur spray, Leg spray, Paw spray
- Spray type alternation: Select button for comfortable alternation of spray modes
- Flow: 1.75 GPM (6.6 L/Min)
- Elongated, brush-like nozzles (1,5 cm) for thorough cleaning with massage effect
- Ergonomic design
- Water Boost: boost function to increase waterflow when needed
- Integrated double backflow prevention
- Connection thread: ½" NPT
- Connection dimension: DN15
- Suitable for continous flow water heaters
- Rinseable screen seal

Item details

List Price $ 220.00

Technology

Select SELECT

EcoRight

Design awards

reddot winner 2022

Compliance

WaterSense Meets EPA Criteria Certified by IAPMO R&T

UPC C ®

Product image
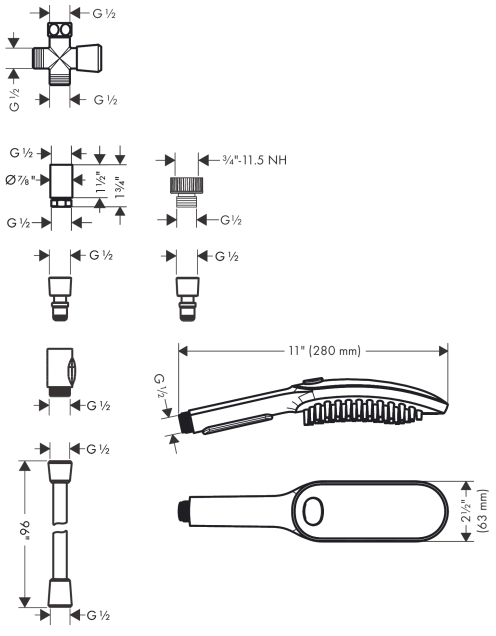
Scale drawing