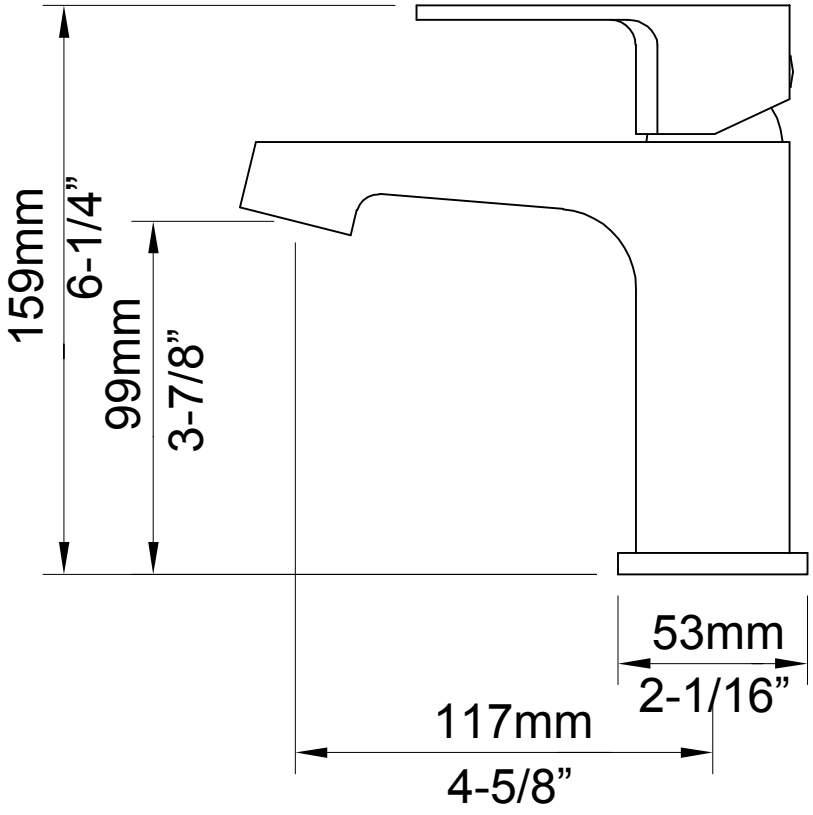
159mm
6-1/4”
99mm
3-7/8”
53mm
2-1/16”
117mm
4-5/8”

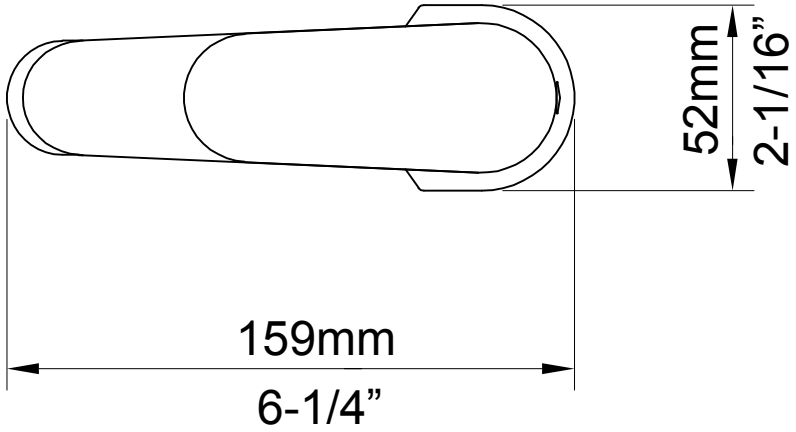
52mm
2-1/16”
159mm
6-1/4”

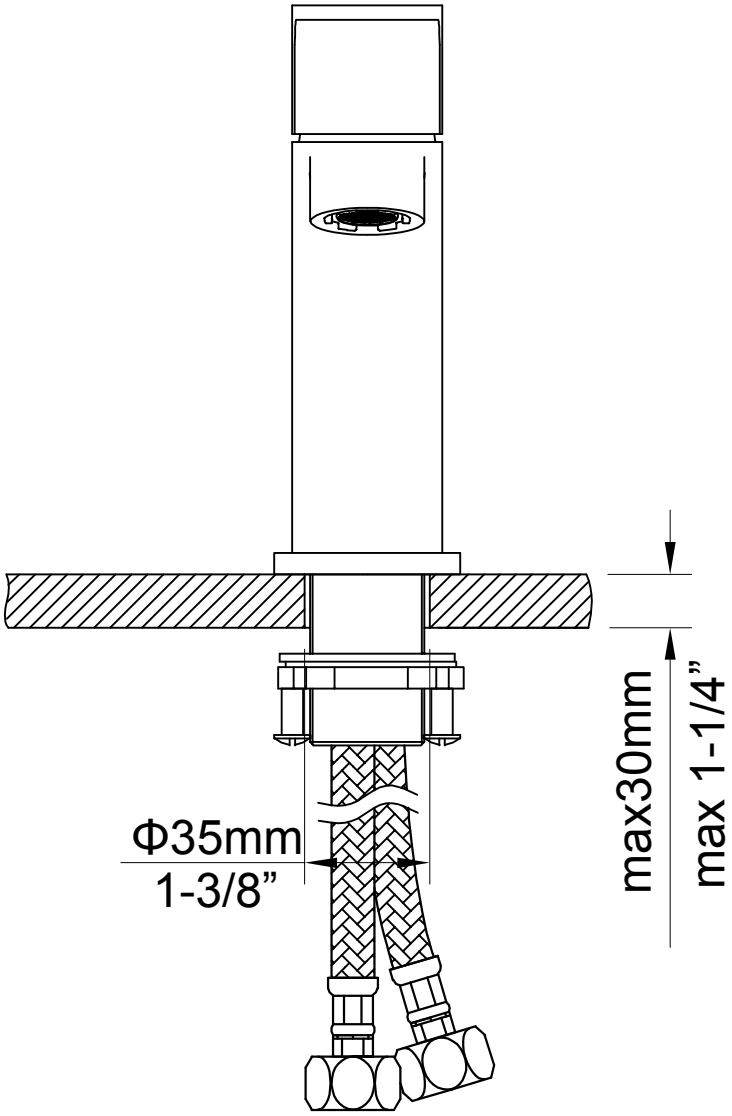
Φ35mm
1-3/8”
max30mm
max 1-1/4”