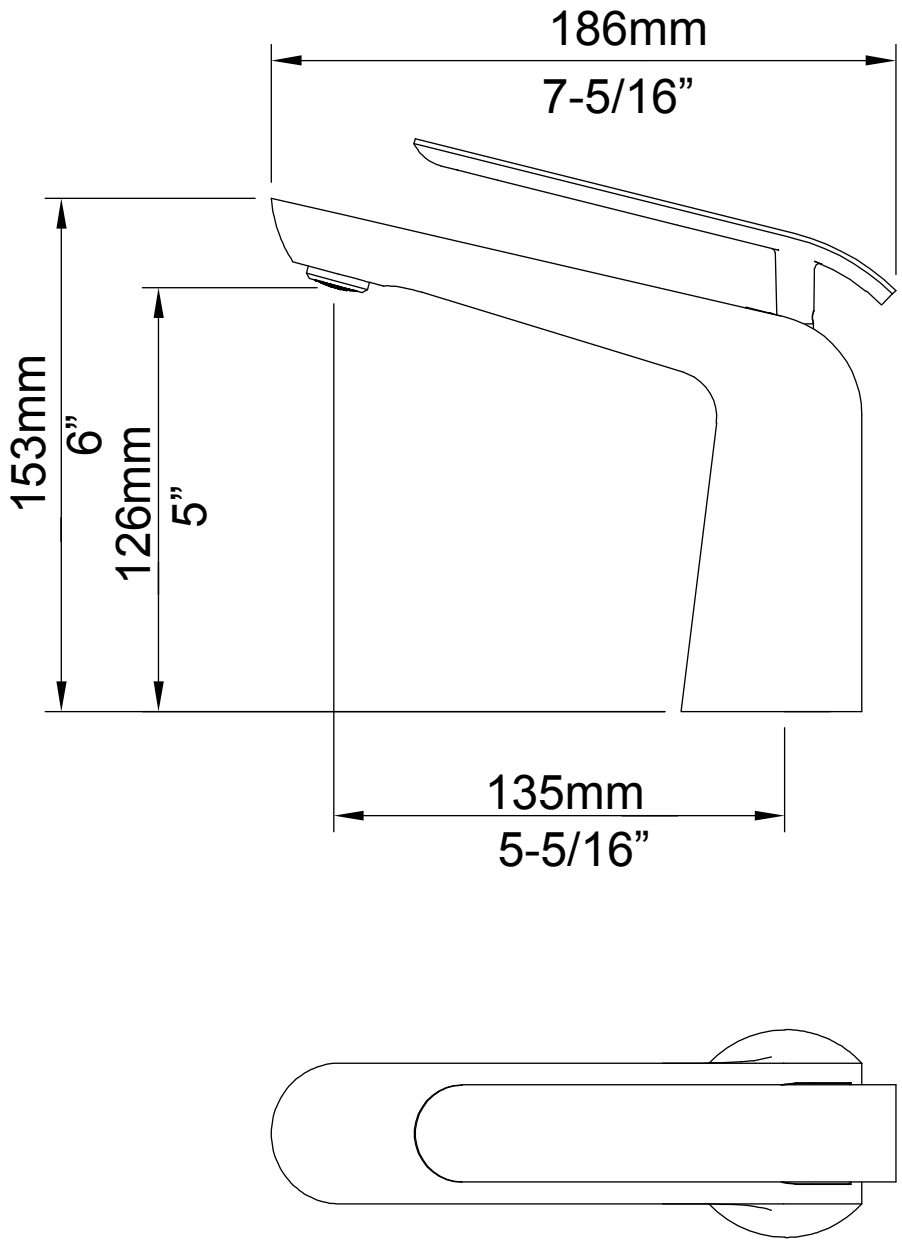
186mm
7-5/16”
153mm
6”
126mm
5”
135mm
5-5/16”

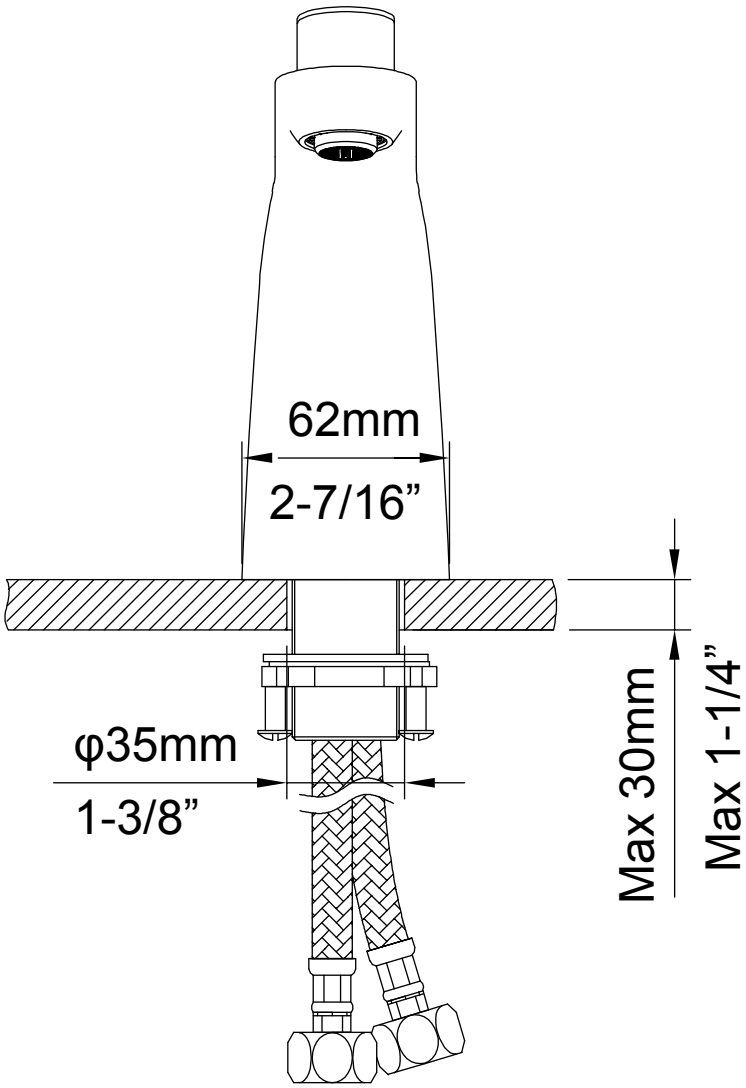
62mm
2-7/16”
φ35mm
1-3/8”
Max 30mm
Max 1-1/4”