SPECIFICATIONS

Overall Dimensions	40" W x 18" D(front to back) x 33.5” H(with sink)
Counter Dimensions	**40**W x 18" D(front to back) x 3.75”
Sink Dimensions	
Drain Hole	1-1/2" diameter
Faucet Hole	1-3/8” diameter
Faucet Configurations	Single hole drilling

All measurements are approximate.

Emperia 40" VM-V12041

Bathroom Vanity Cabinet

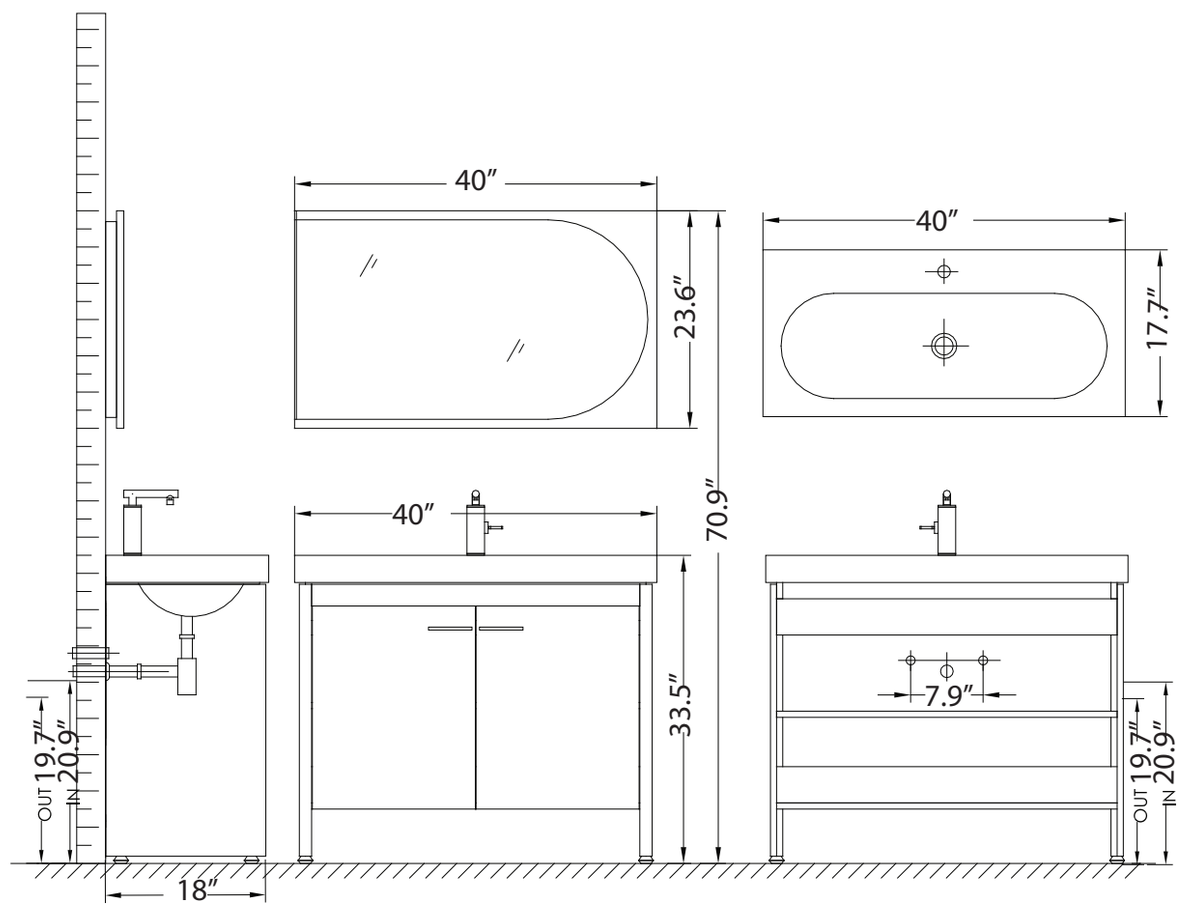

Customer Service: 1.510.259.0735
www.conceptbaths.com